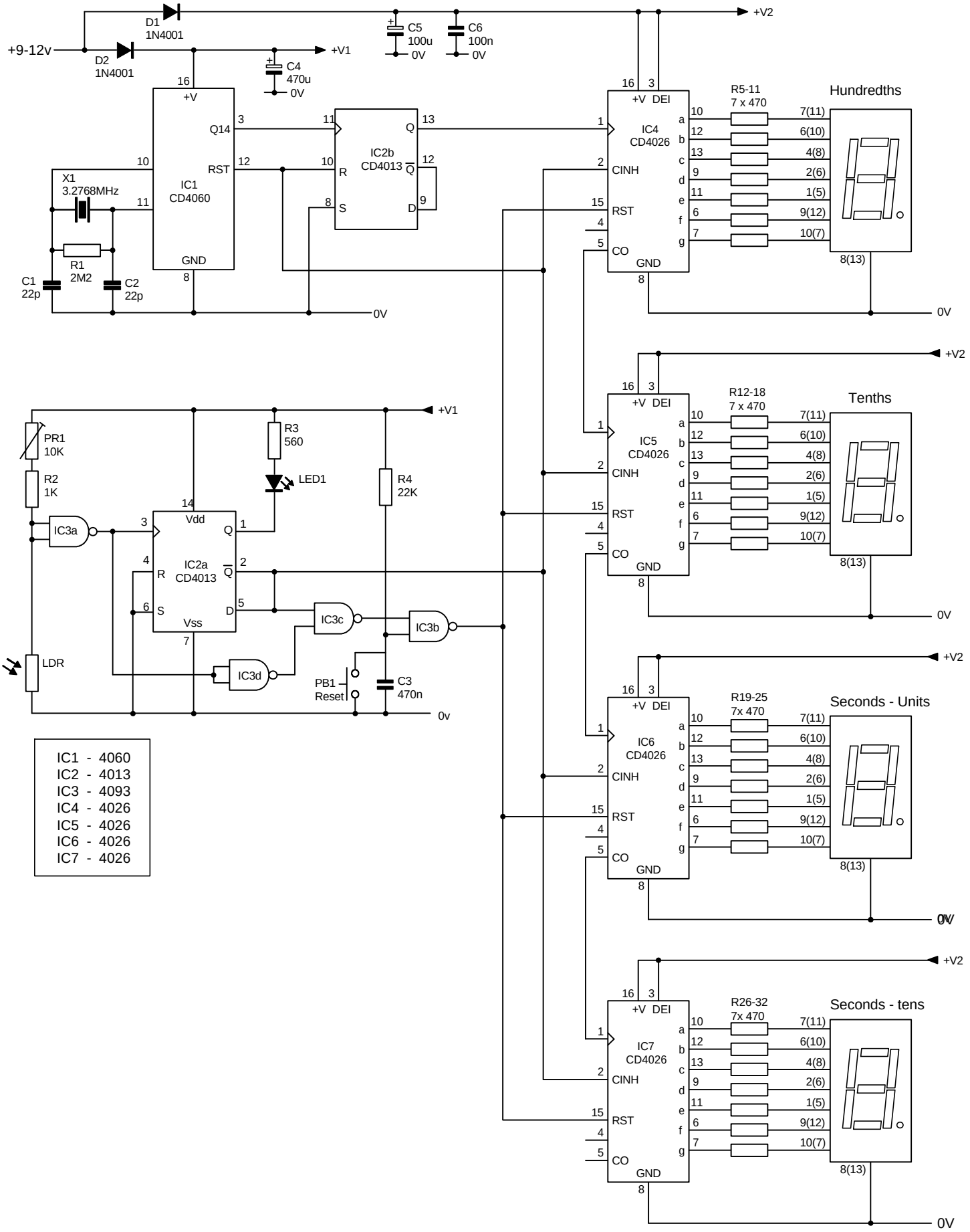4 DIGIT LAP TIMER - Design by Phil Townshend c. 2003