DMX DRIVER ONLY VERSION

This has only DMX output and serial communication. No analogue inputs. So the PIC knows which PCB it is in, RB7-4 must be grounded. Also to prevent stray samples, AN0-4 must be grounded also.

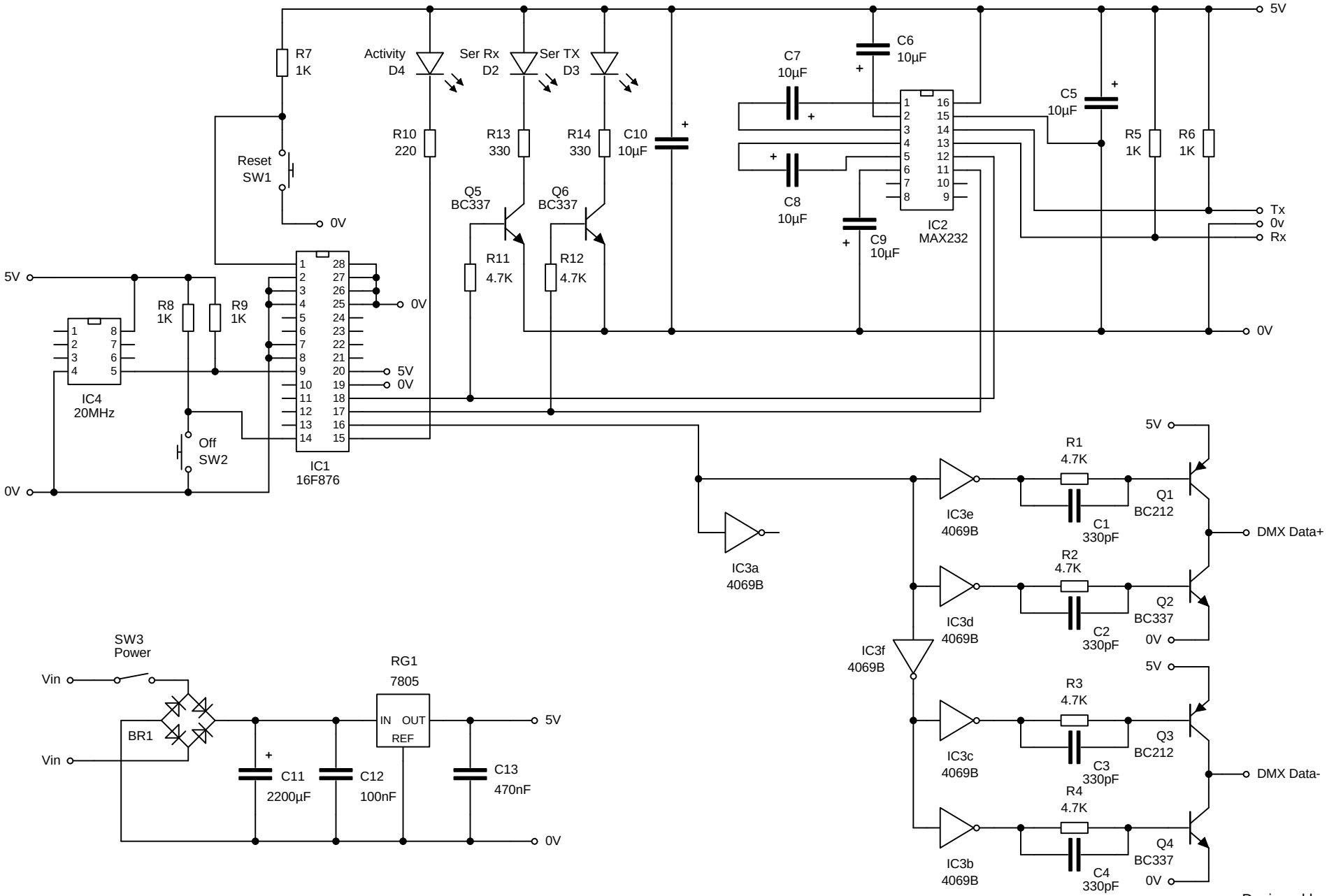

Designed by Phil Townshend